TAUNTON'S Fine WoodWorking.com

Dead-Flat Assembly Table

Drawing By: Jim Richey
Plan By: Marc Spagnuolo

Video Tutorials Online at:
www.FineWoodworking.com/TheWoodWhisperer

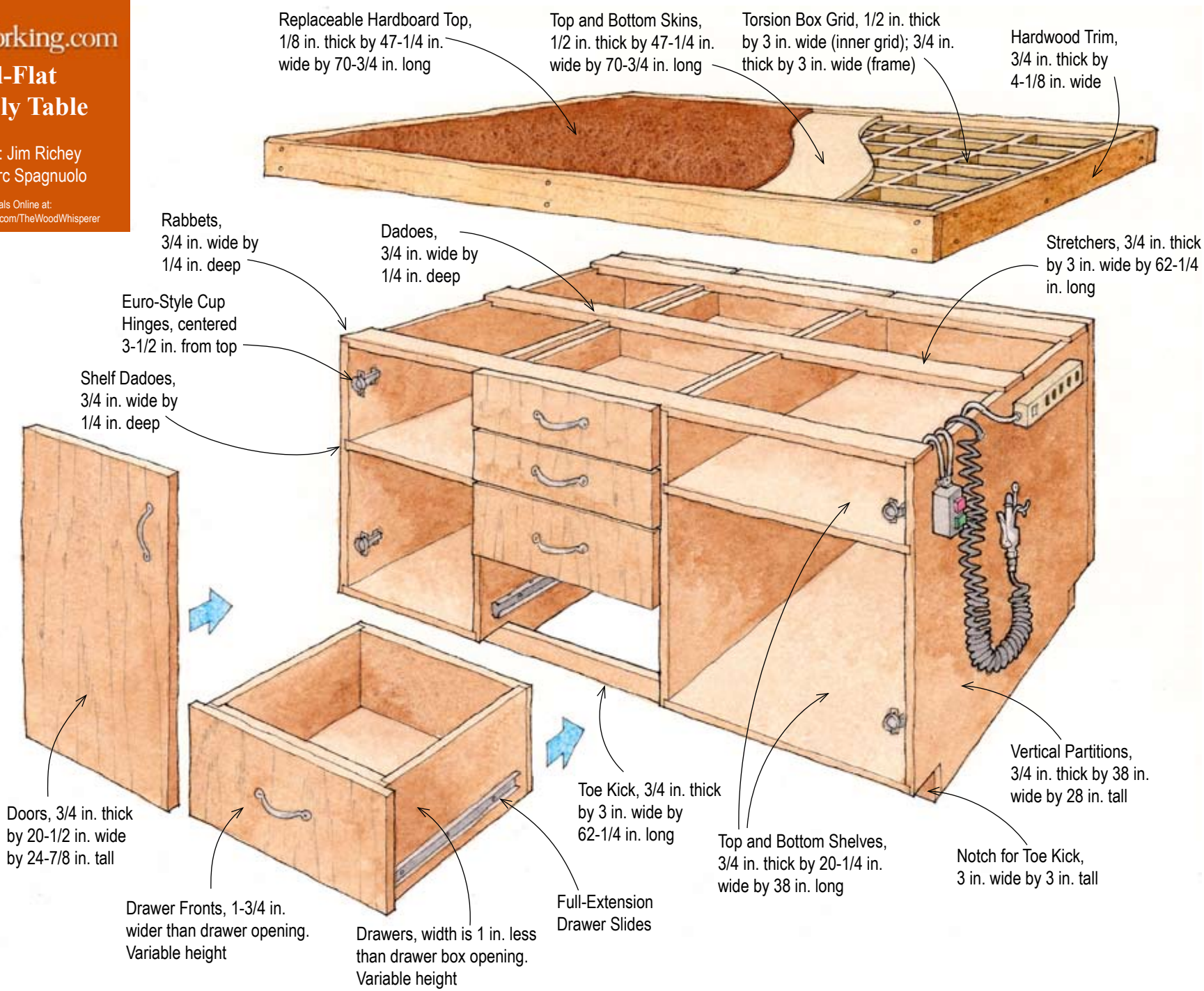

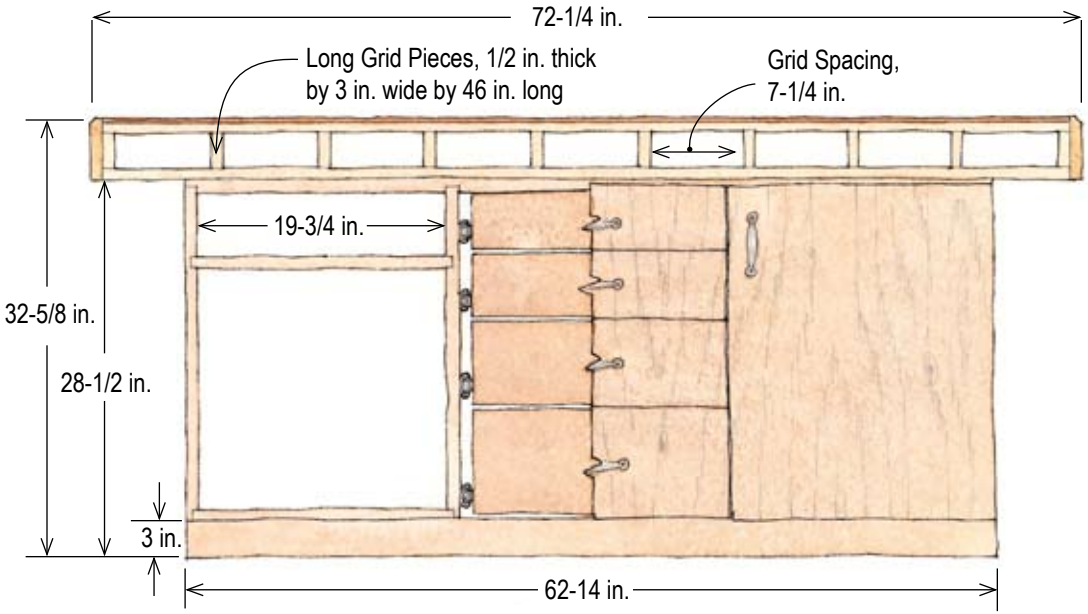
72-1/4 in.
Long Grid Pieces, 1/2 in. thick by 3 in. wide by 46 in. long
Grid Spacing, 7-1/4 in.
19-3/4 in.
32-5/8 in.
28-1/2 in.
3 in.
62-14 in.

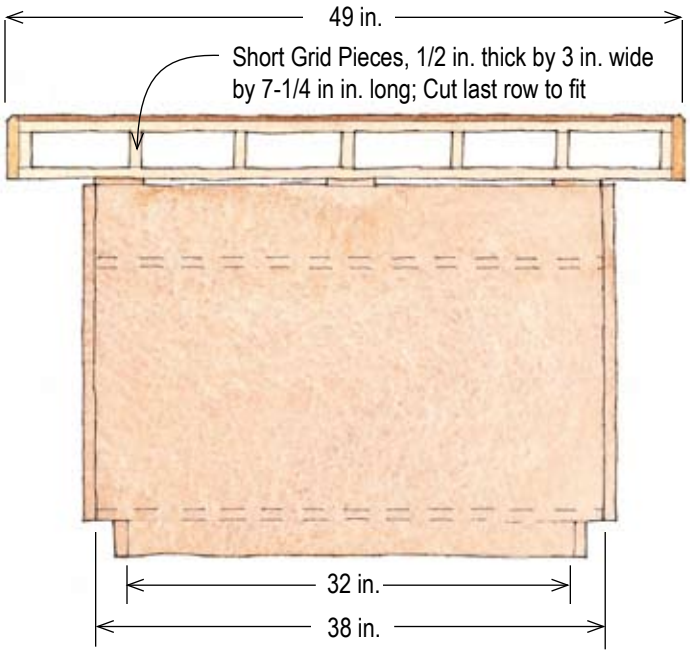
49 in.
Short Grid Pieces, 1/2 in. thick by 3 in. wide by 7-1/4 in in. long; Cut last row to fit
32 in.
38 in.

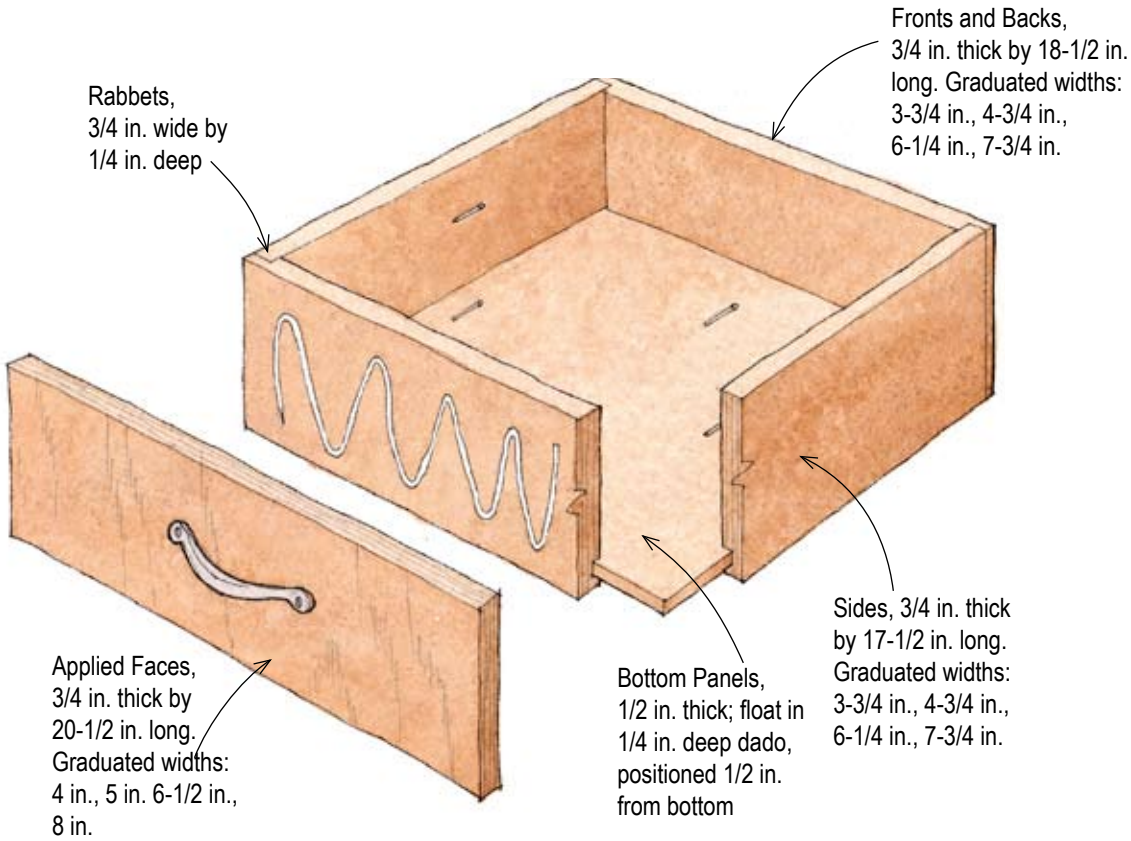
Fronts and Backs, 3/4 in. thick by 18-1/2 in. long. Graduated widths: 3-3/4 in., 4-3/4 in., 6-1/4 in., 7-3/4 in.
Rabbets, 3/4 in. wide by 1/4 in. deep
Applied Faces, 3/4 in. thick by 20-1/2 in. long. Graduated widths: 4 in., 5 in. 6-1/2 in., 8 in.
Bottom Panels, 1/2 in. thick; float in 1/4 in. deep dado, positioned 1/2 in. from bottom
Sides, 3/4 in. thick by 17-1/2 in. long. Graduated widths: 3-3/4 in., 4-3/4 in., 6-1/4 in., 7-3/4 in.

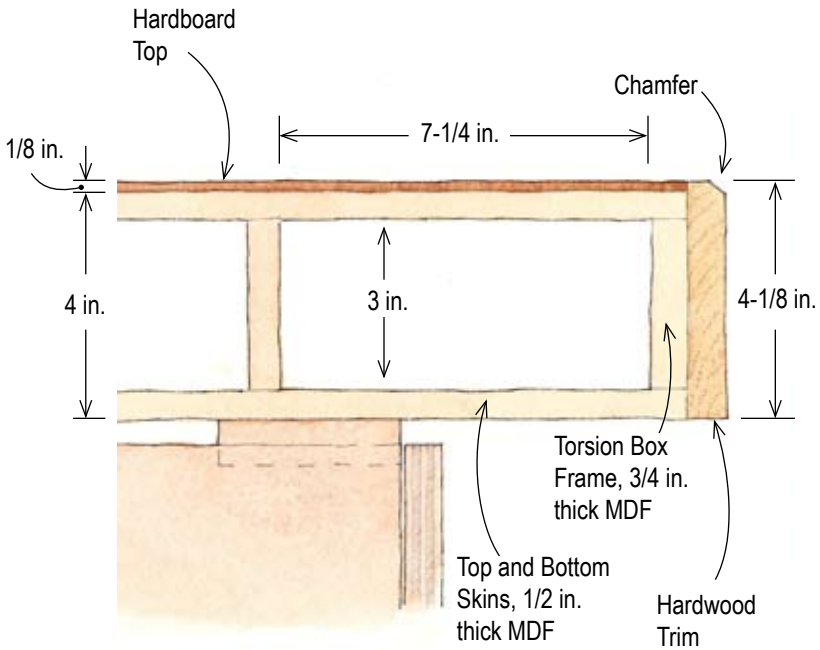
Hardboard Top
Chamfer
7-1/4 in.
1/8 in.
4 in.
3 in.
4-1/8 in.
Torsion Box Frame, 3/4 in. thick MDF
Top and Bottom Skins, 1/2 in. thick MDF
Hardwood Trim